SOLETTA
BARRIERE 110 CM

MONTAGEANLEITUNG



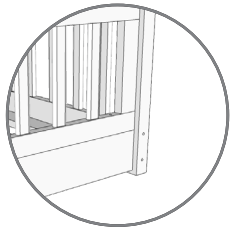

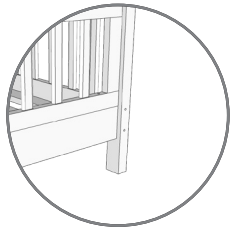



G8 6,4x80mm **29x**	S4 3,5x40mm **8x**	E1 8x32mm **6x**
K2 **1x**	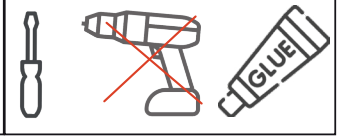	

1 x 4 **2** x 2 **3** x 1 **4** x 1 **5** x 1 **6** x 1 **7** x 4 **8** x 1
9 x 1

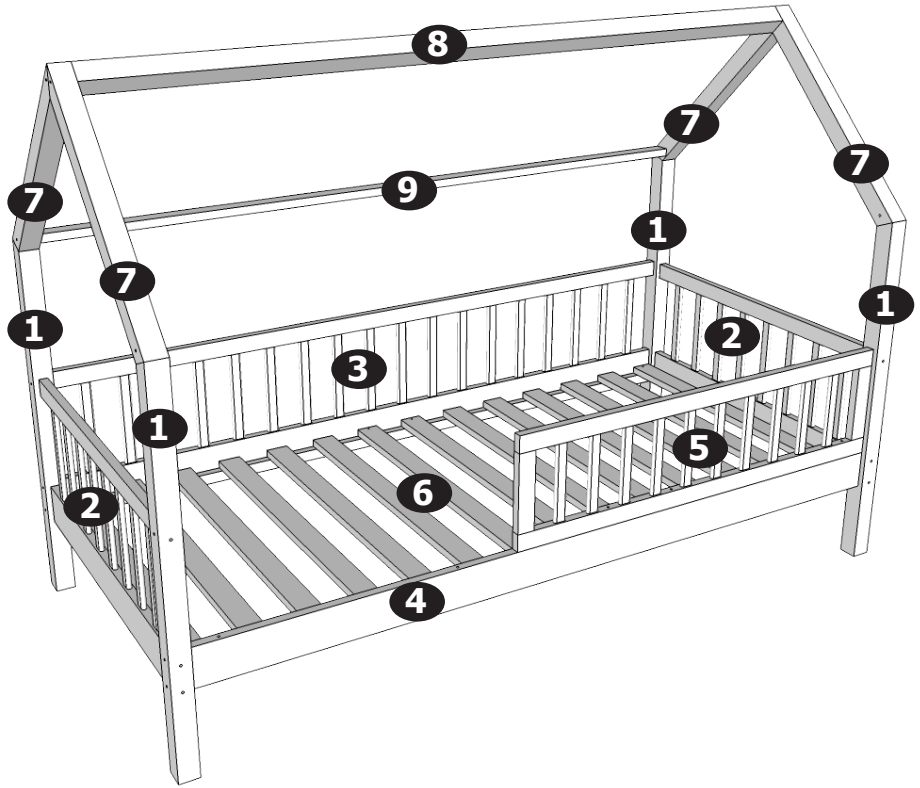

7

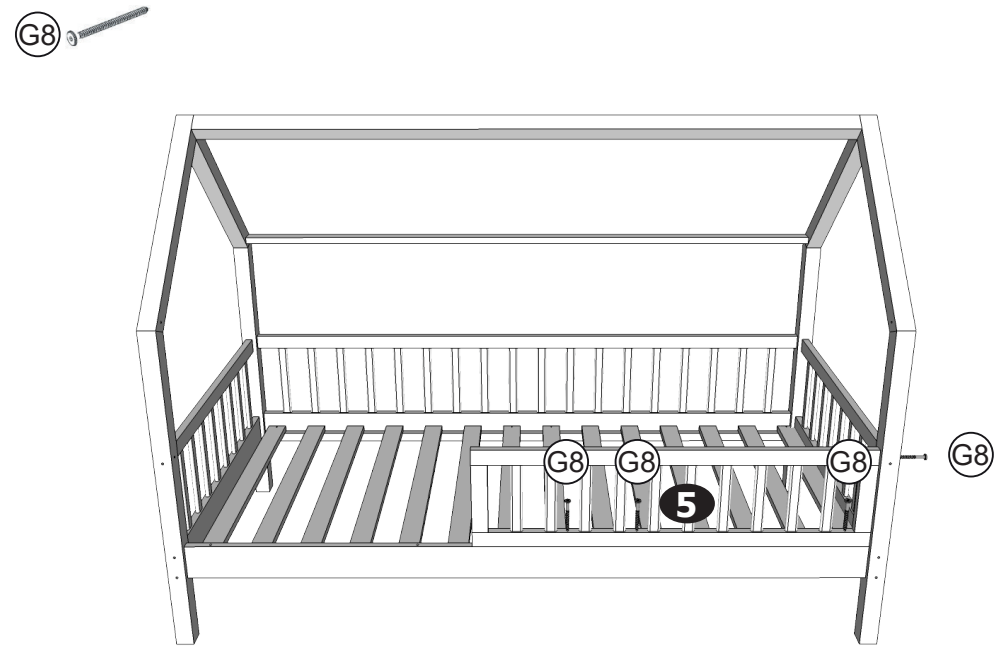
G8
G8
G8
G8
G8
5

1

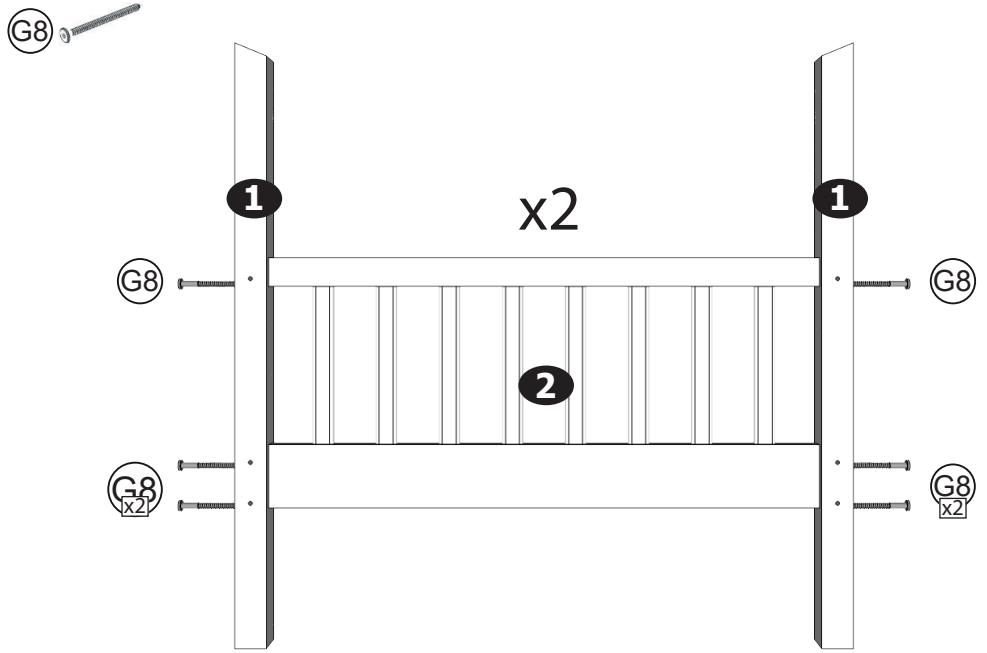
G8
x2
1
1
G8
G8
2
G8
x2
G8
x2

8

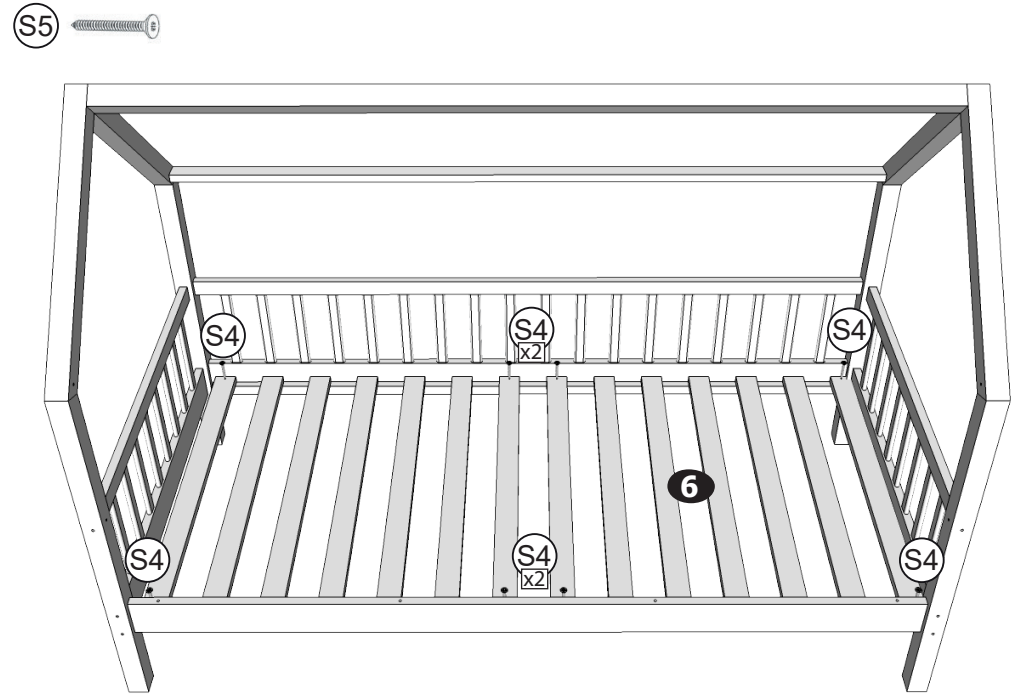
S5
S4
S4
x2
S4
6
S4
S4
x2
S4

2

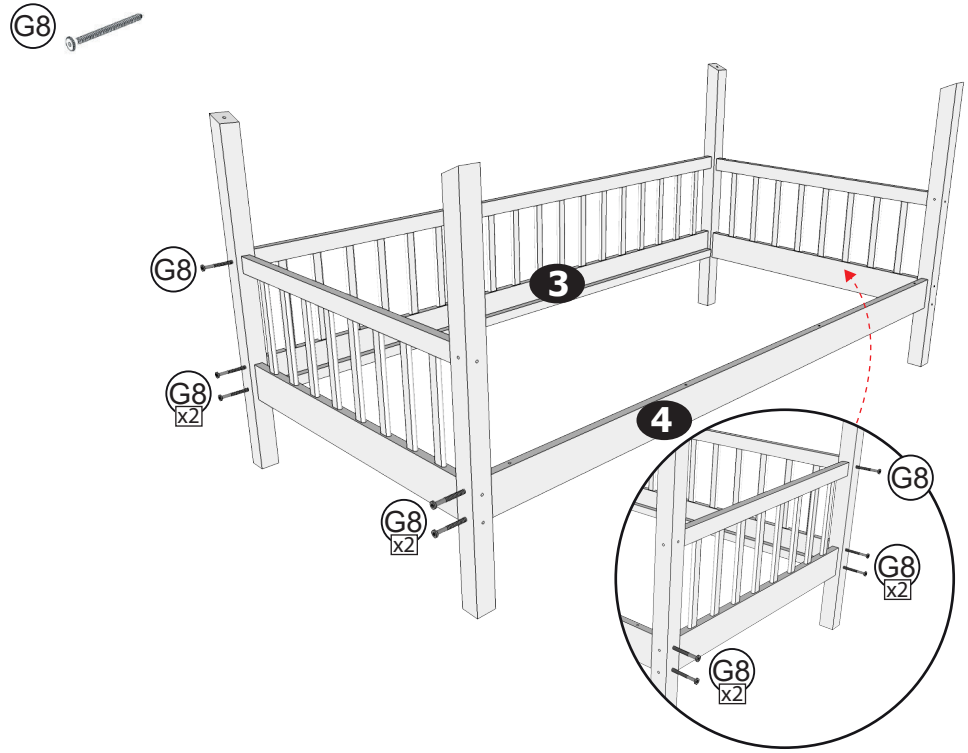
G8
G8
G8
x2
3
4
G8
G8
x2
G8
x2
G8
x2

3

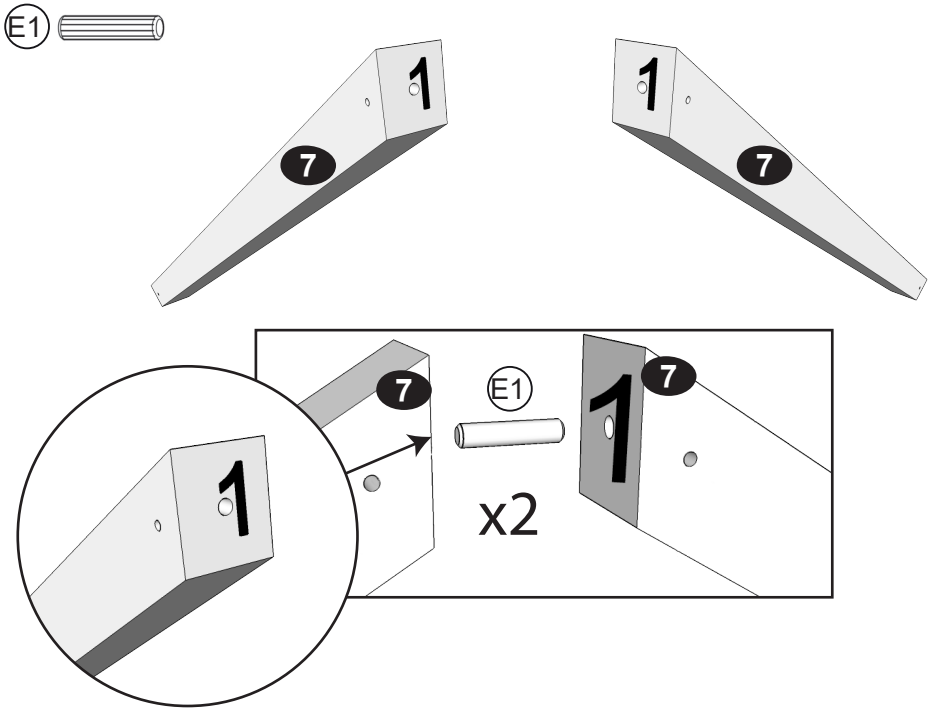
E1
1
7
1
7
7
E1
1
7
x2
1

4

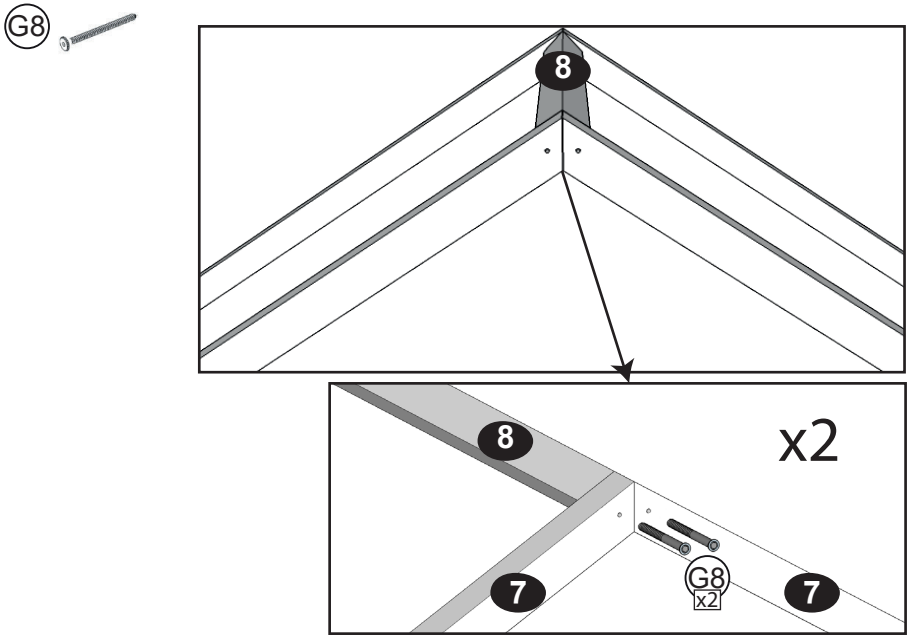
G8
8
8
x2
7
G8
x2
7

5

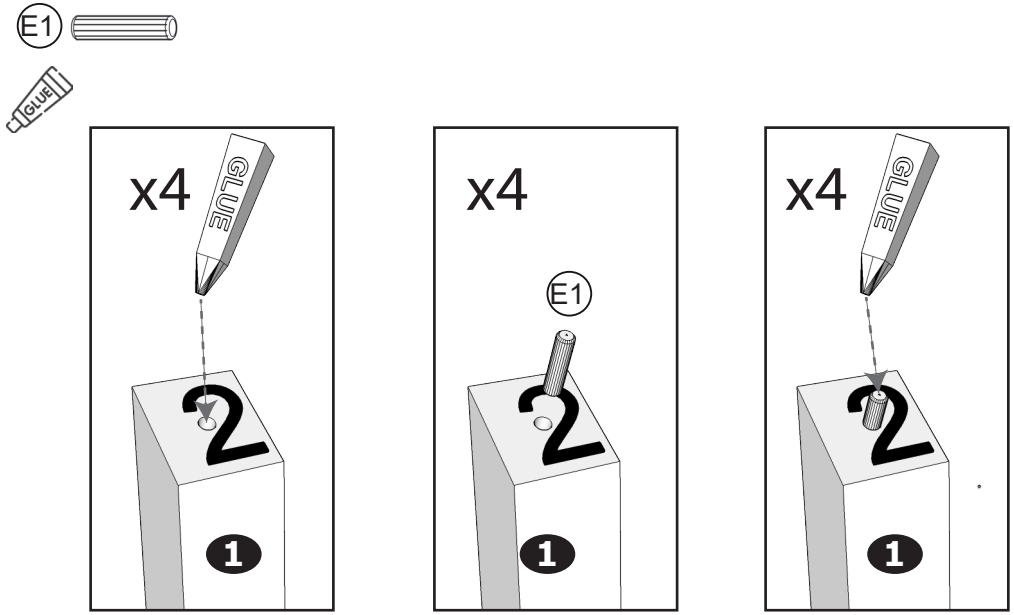
E1
GLUE
x4
GLUE
2
1
x4
E1
2
1
x4
GLUE
2
1

6

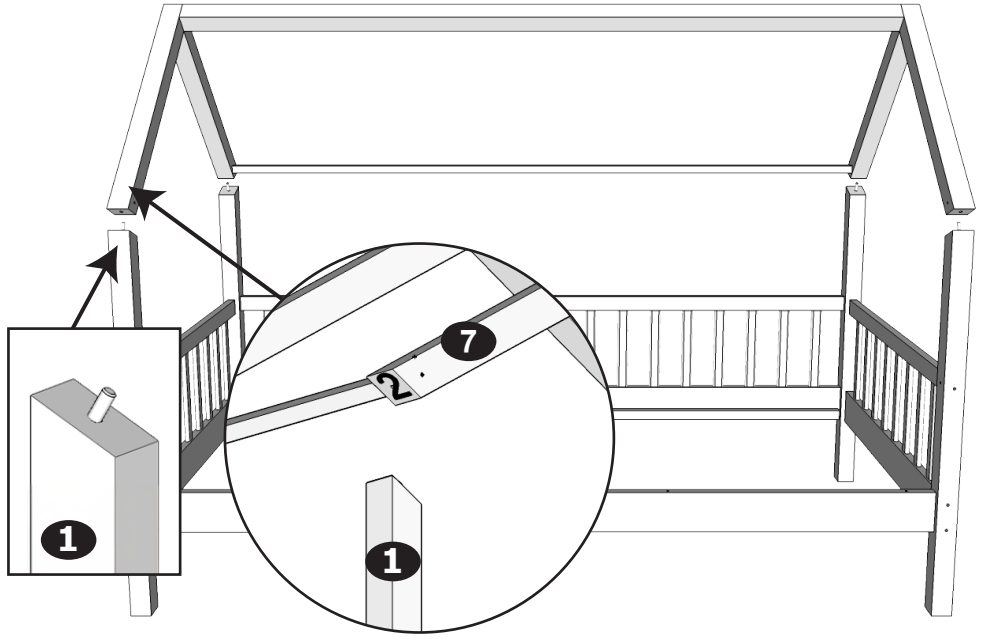
7
2
1
1