SELVIA
ZWEI BARRIEREN

MONTAGEANLEITUNG



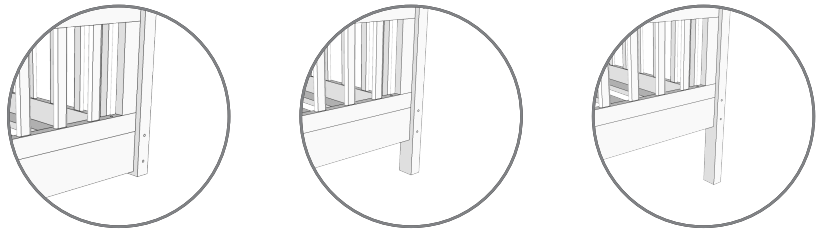

G8  6,4x80mm **36x**	S5  3,5x40mm **8x**	E1  8x45mm **6x**
K2  **1x**		

1 x 4 **2** x 2 **3** x 1 **4** x 1 **5** x 2 **6** x 1 **7** x 4 **8** x 1 **9** x 2

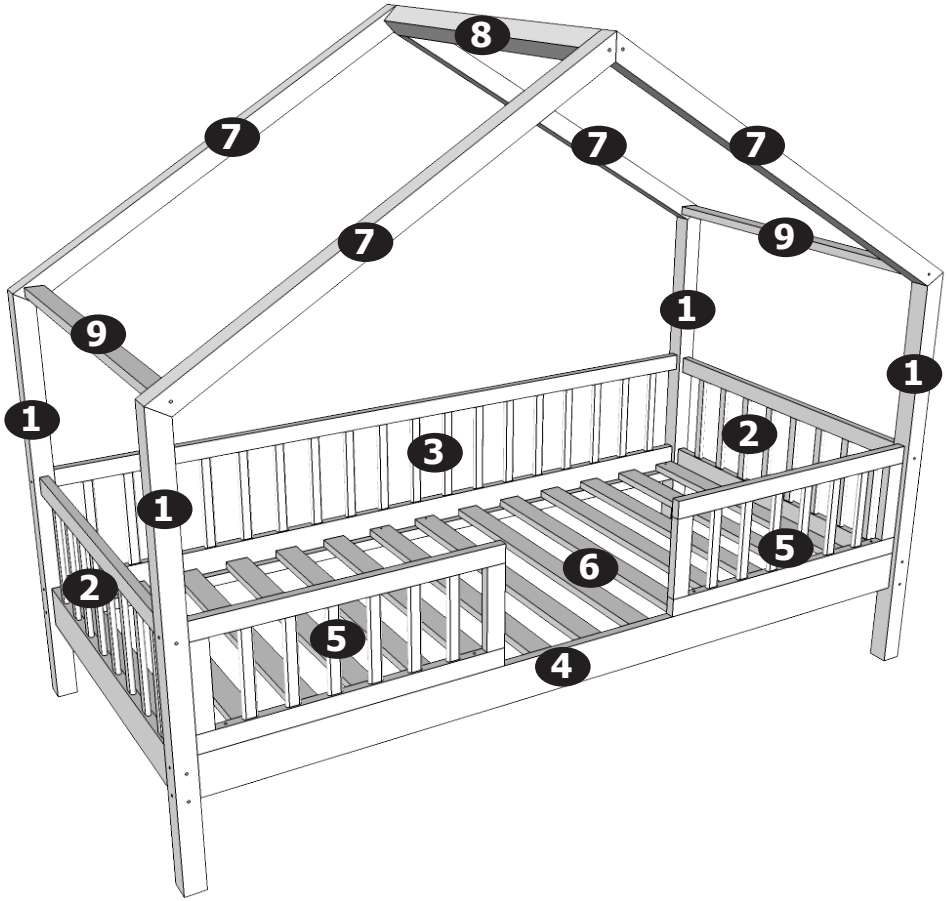

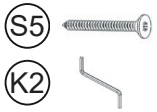

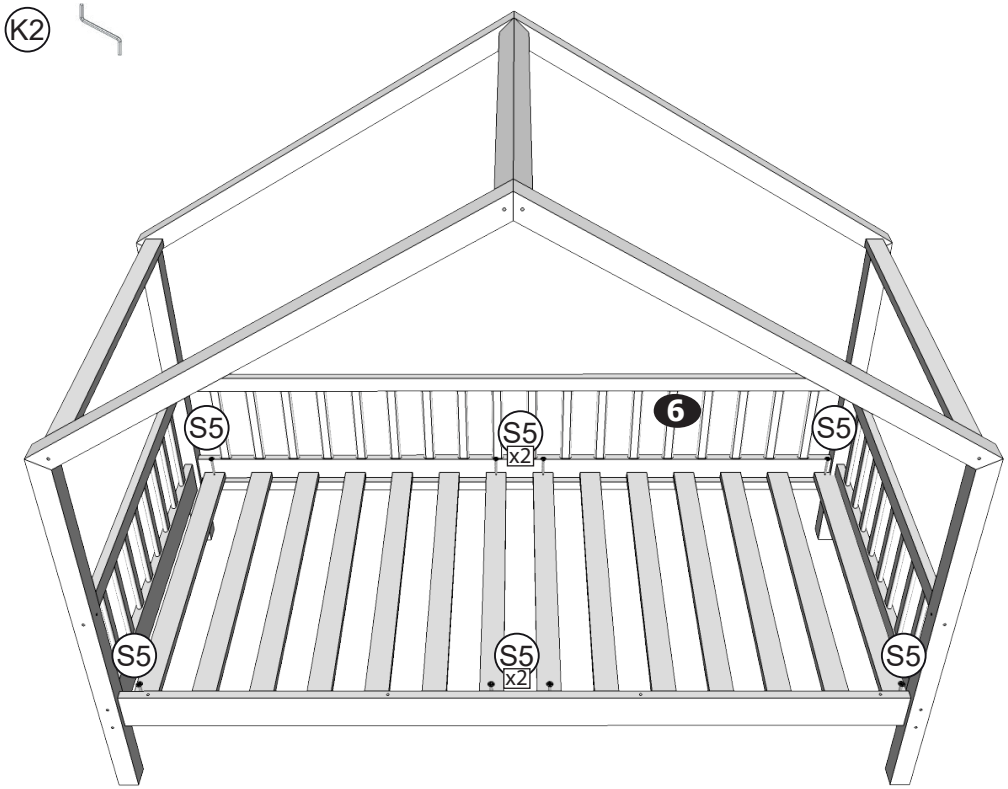

3

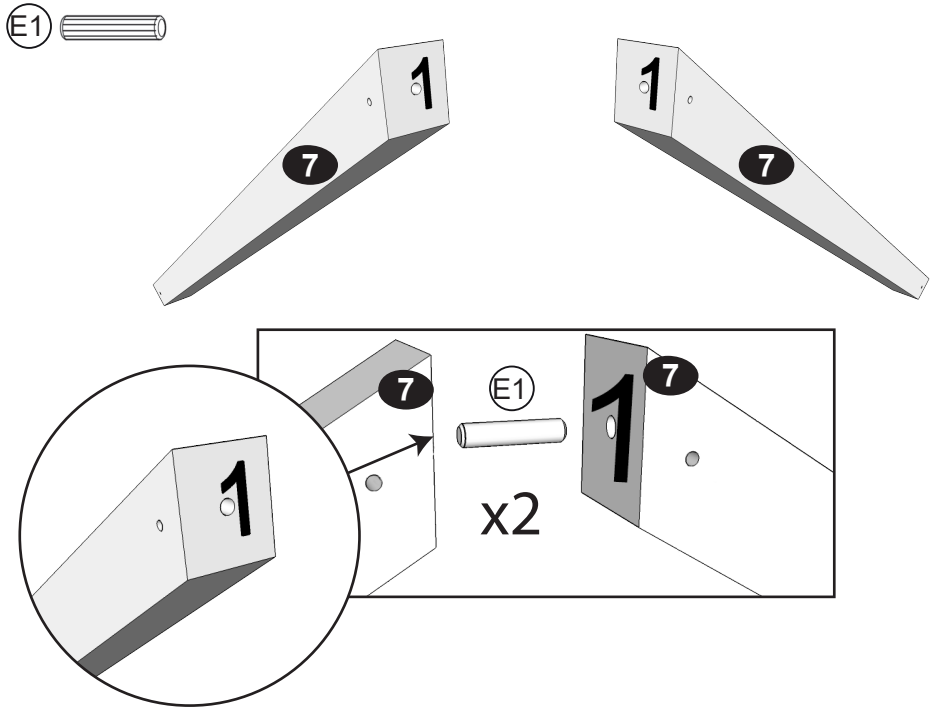
E1
1
7
1
7
7
E1
1
7
x2
1

4

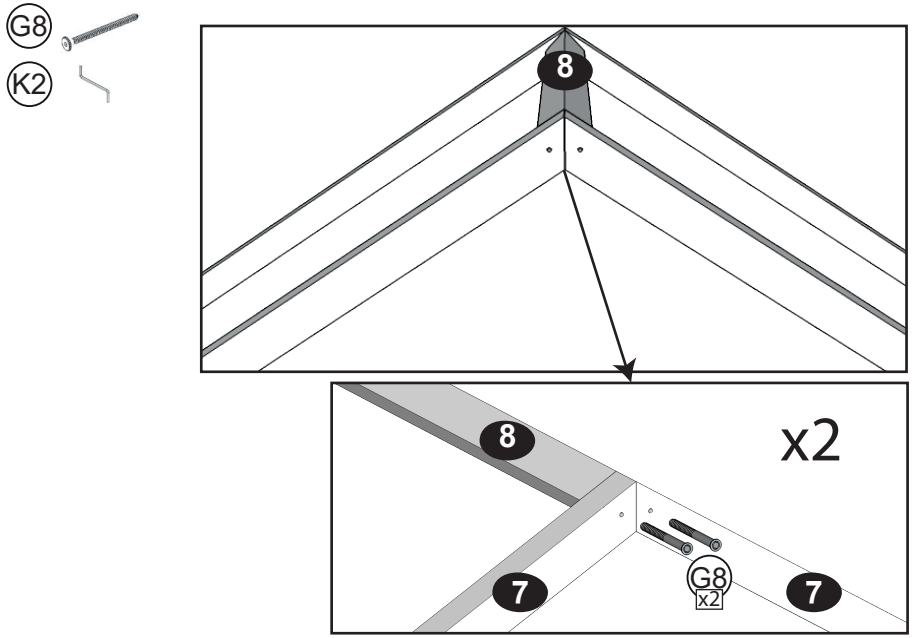
G8
K2
8
8
x2
7
G8
x2
7

5

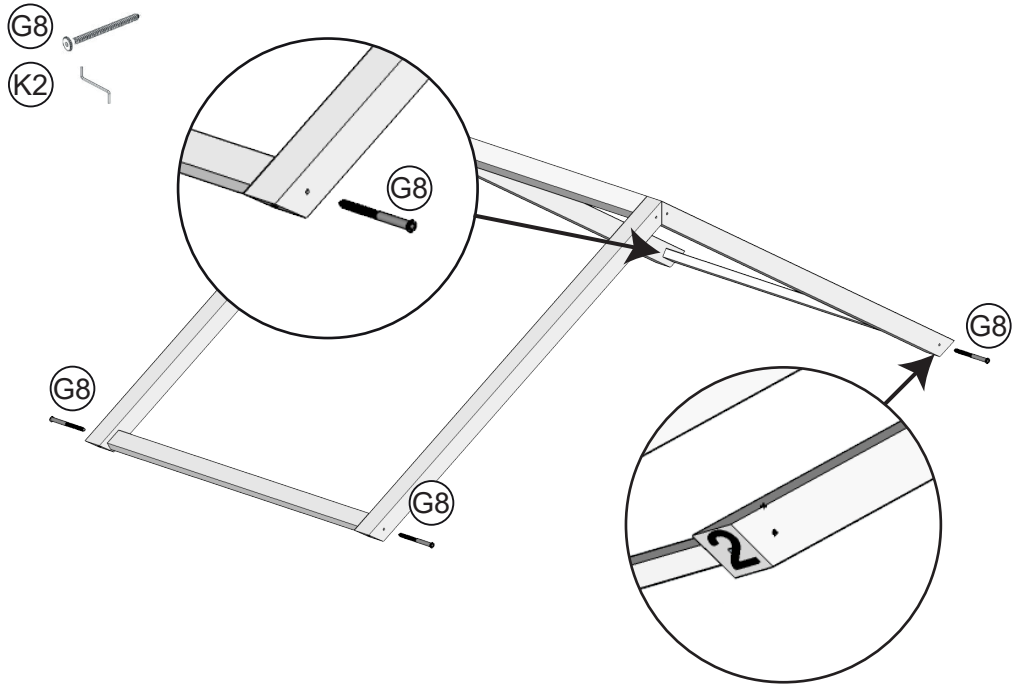
G8
K2
G8
G8
G8
G8
2

6

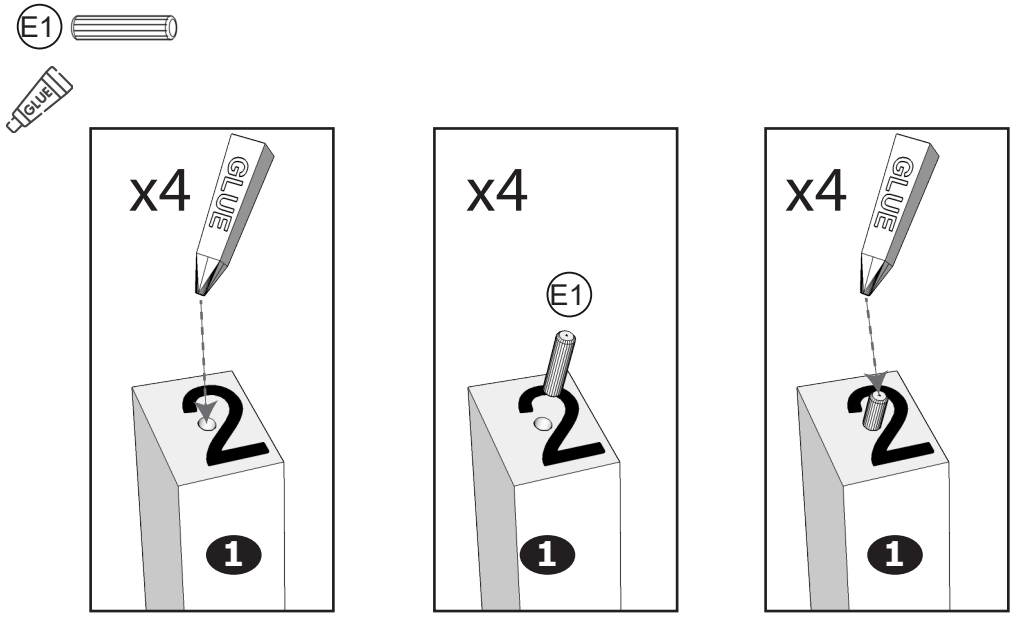
E1
GLUE
x4
GLUE
2
1
x4
E1
2
1
x4
GLUE
2
1

7

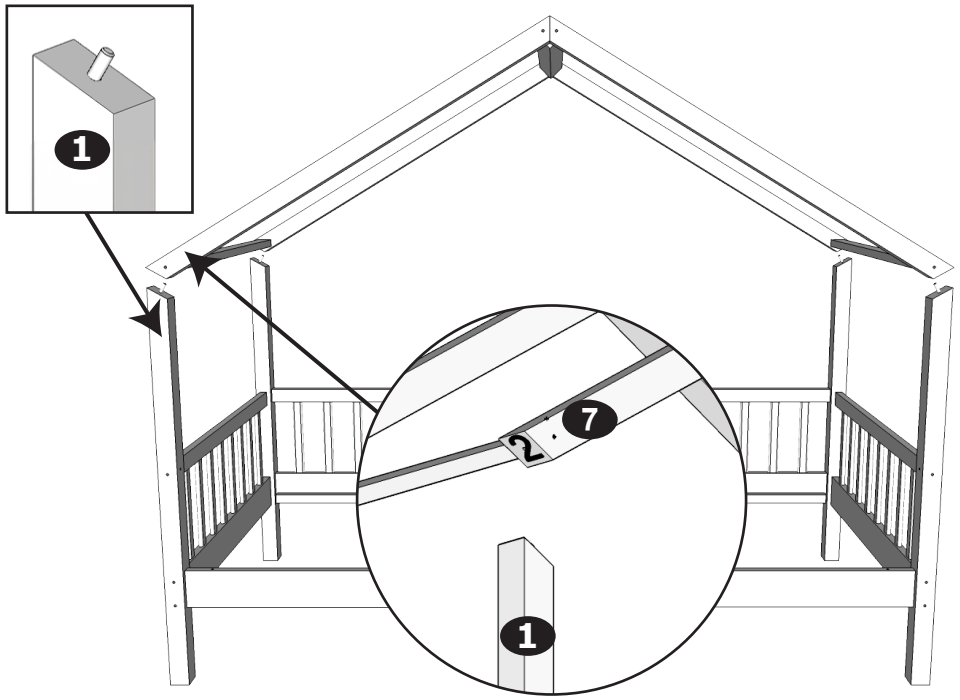
1
7
1

1

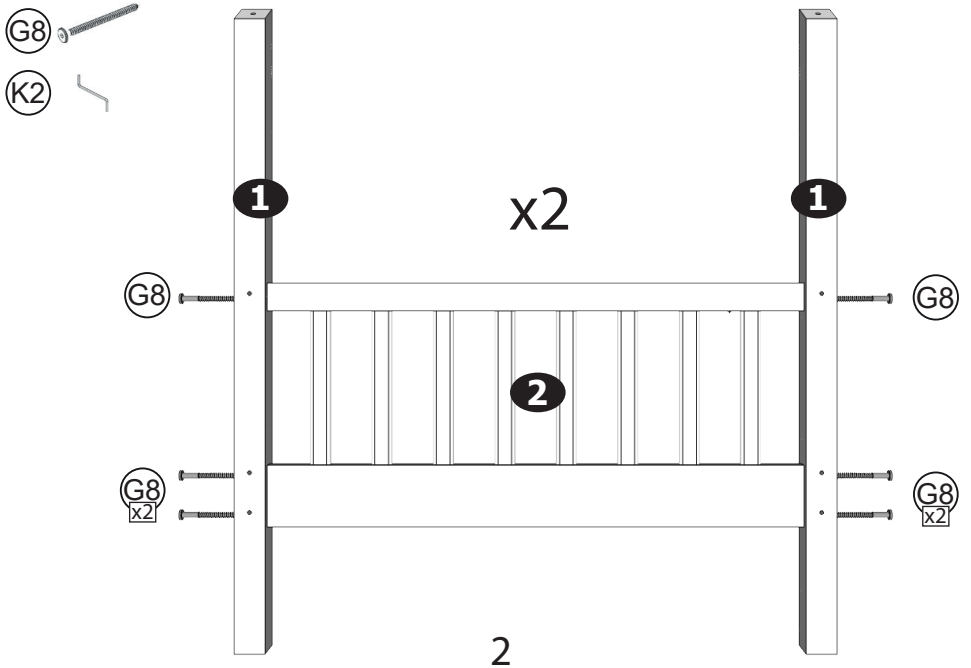
G8
K2
1
x2
1
G8
G8
2
G8
x2
G8
x2

8

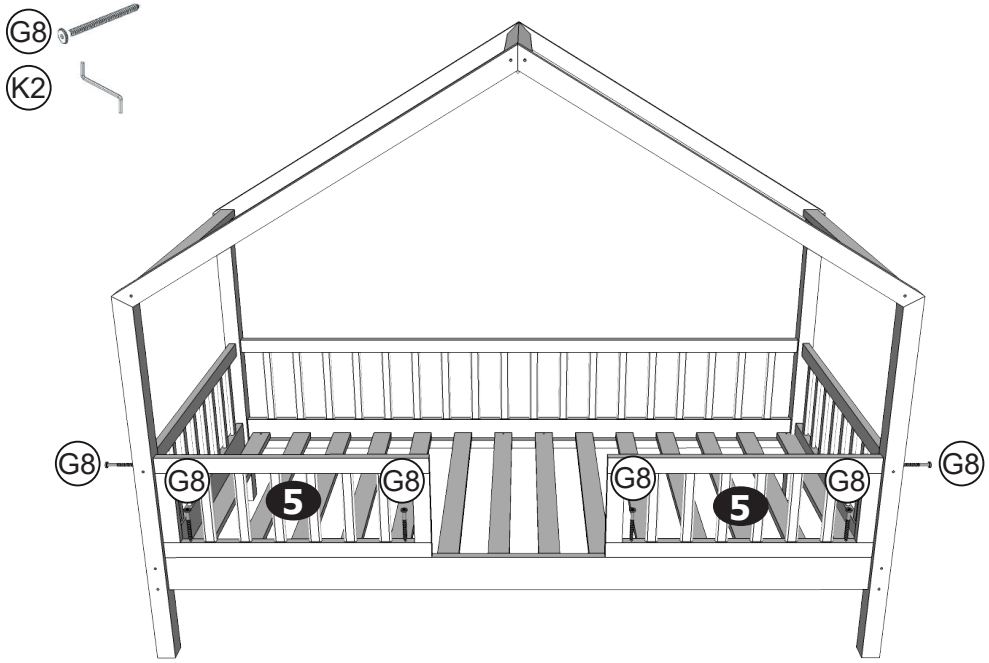
G8
K2
G8
G8
G8
G8
G8
5
5

2

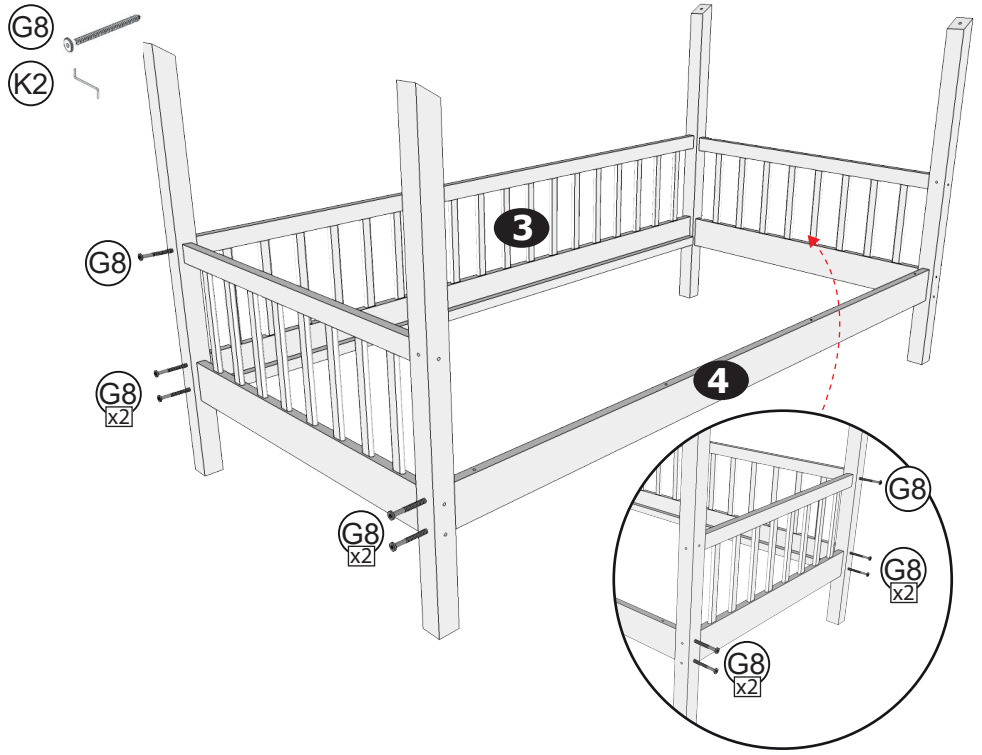
G8
K2
3
G8
G8
x2
4
G8
x2
G8
x2
G8
x2