SELVIA
BARRIERE 110 CM

MONTAGEANLEITUNG



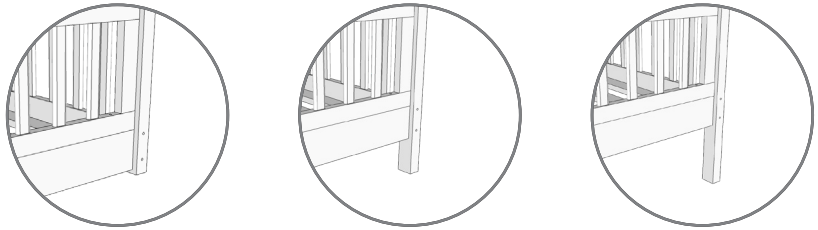

G8  6,4x80mm **33x**	S4  3,5x40mm **8x**	E1  8x32mm **6x**
K2  **1x**		

1 x 4 **2** x 2 **3** x 1 **4** x 1 **5** x 1 **6** x 1 **7** x 4 **8** x 1 **9** x 2

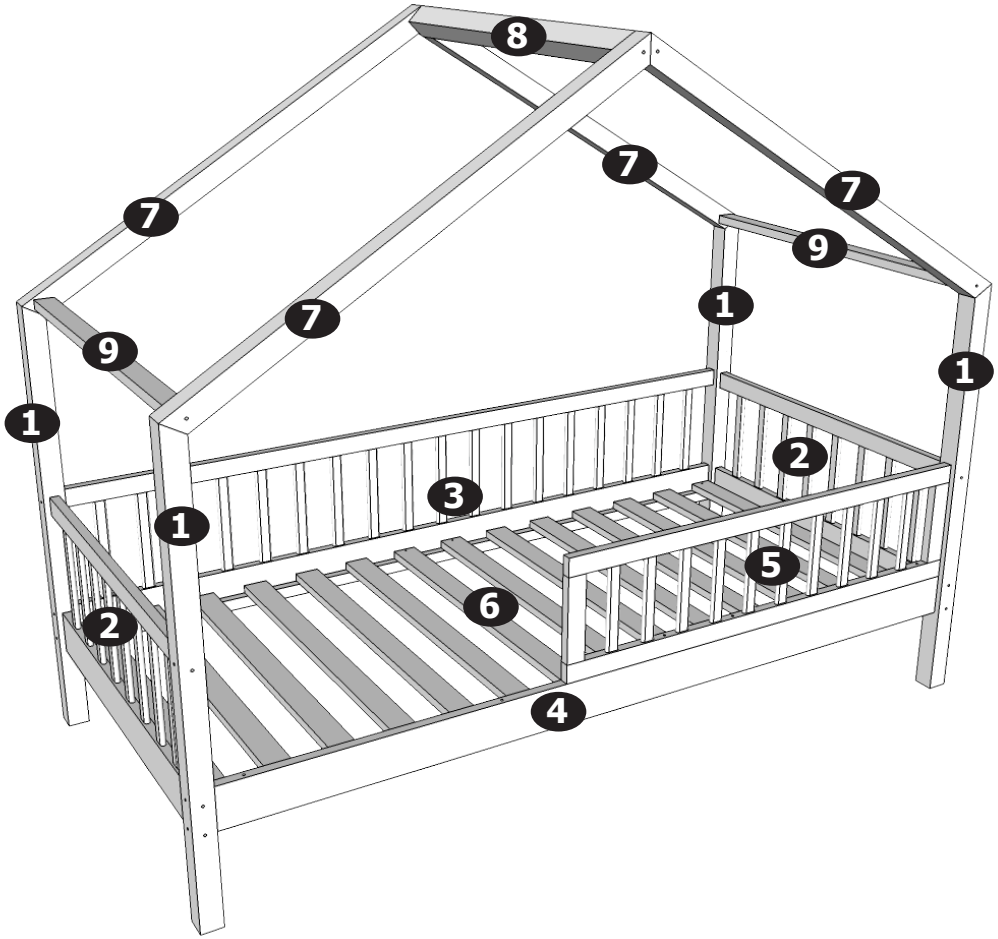

S4 

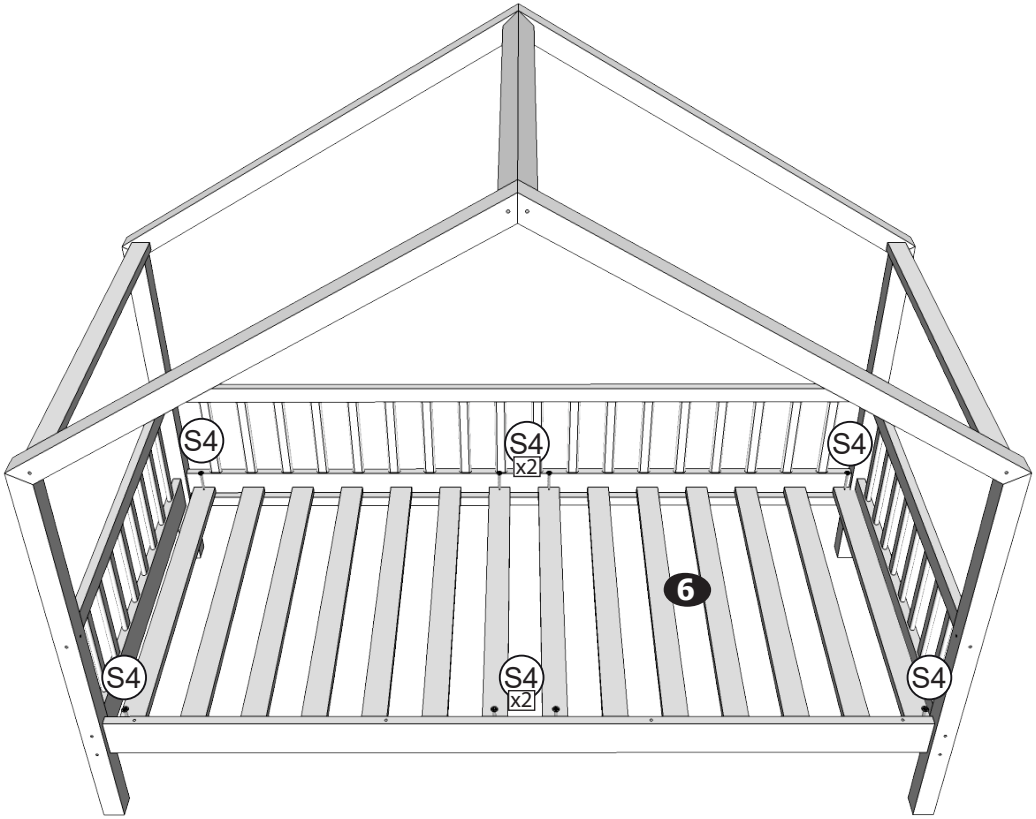

7

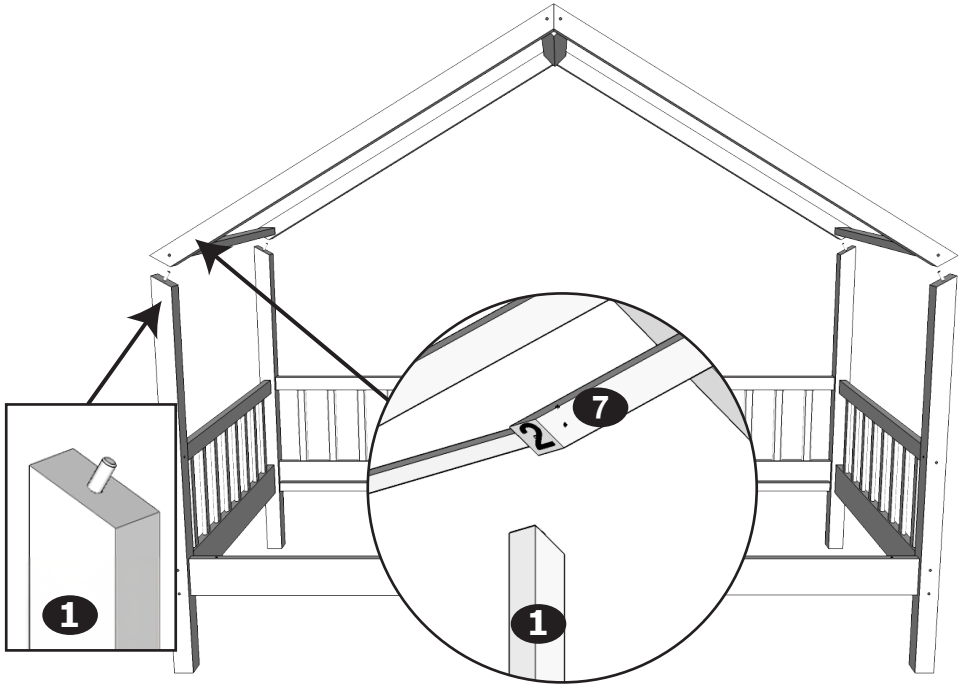
1
2
7
1

8

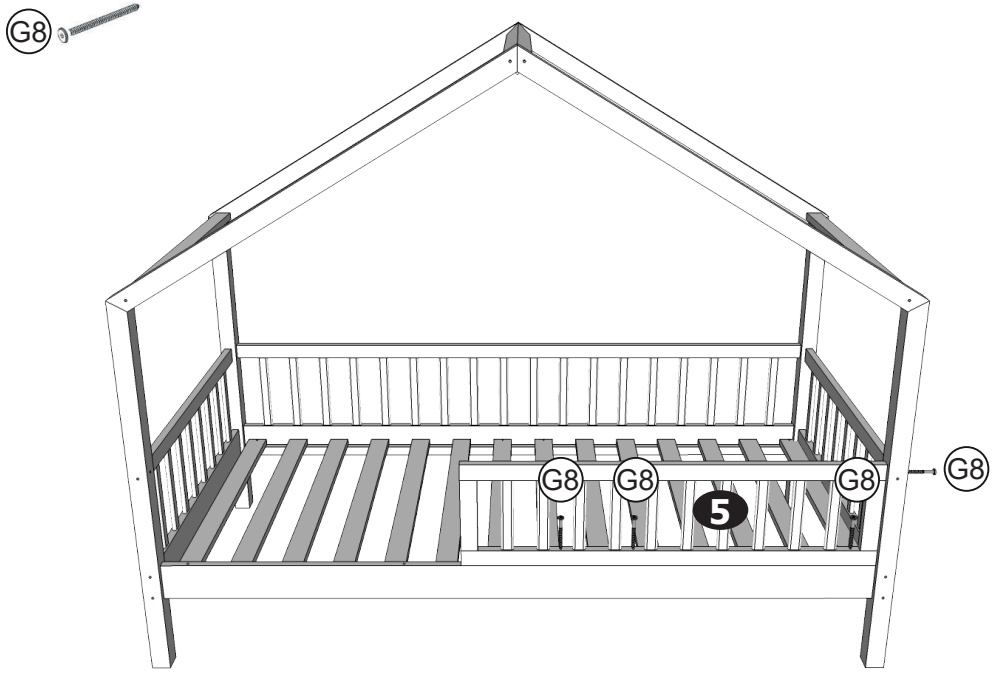
G8
G8
G8
G8
G8
5

1

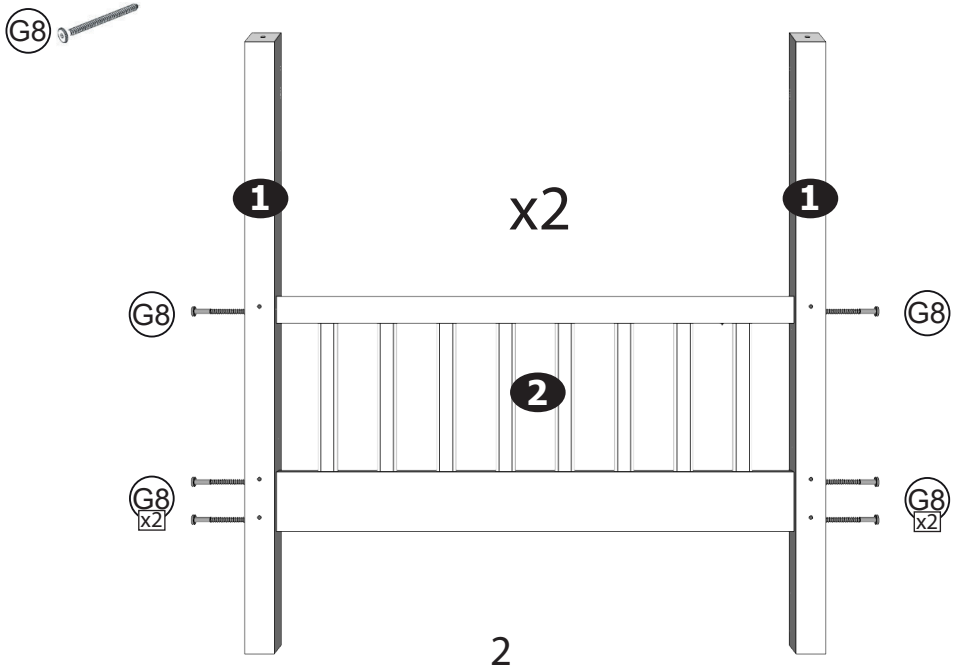
G8
x2
1
1
G8
G8
2
G8
x2
G8
x2

2

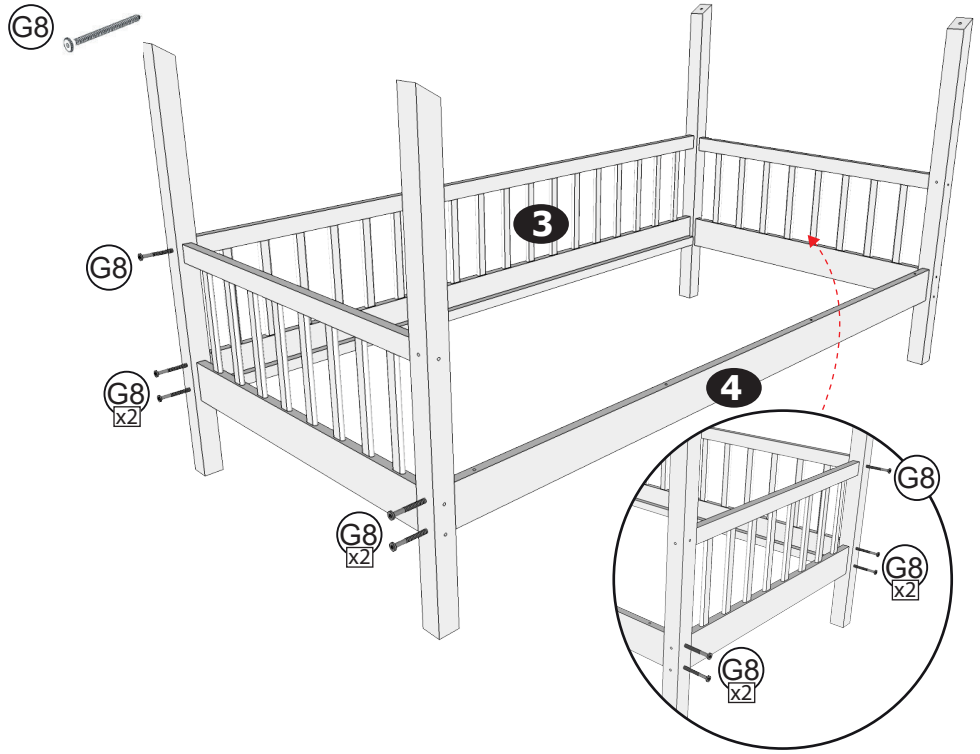
G8
3
G8
G8
x2
4
G8
x2
G8
G8
x2
G8
x2

3

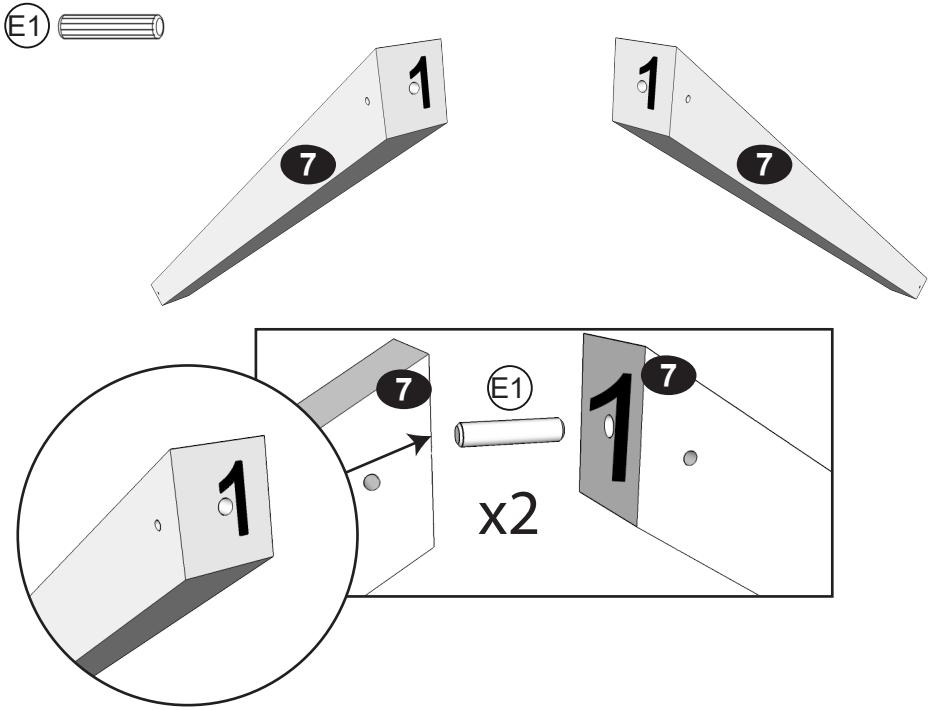
E1
1
7
1
7
7
E1
1
7
x2
1

4

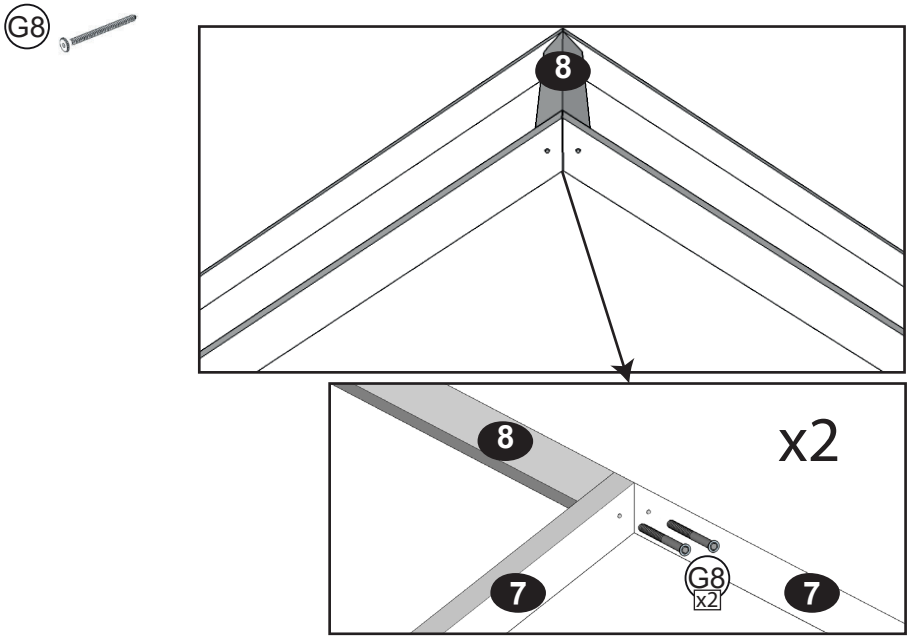
G8
8
8
x2
7
G8
x2
7

5

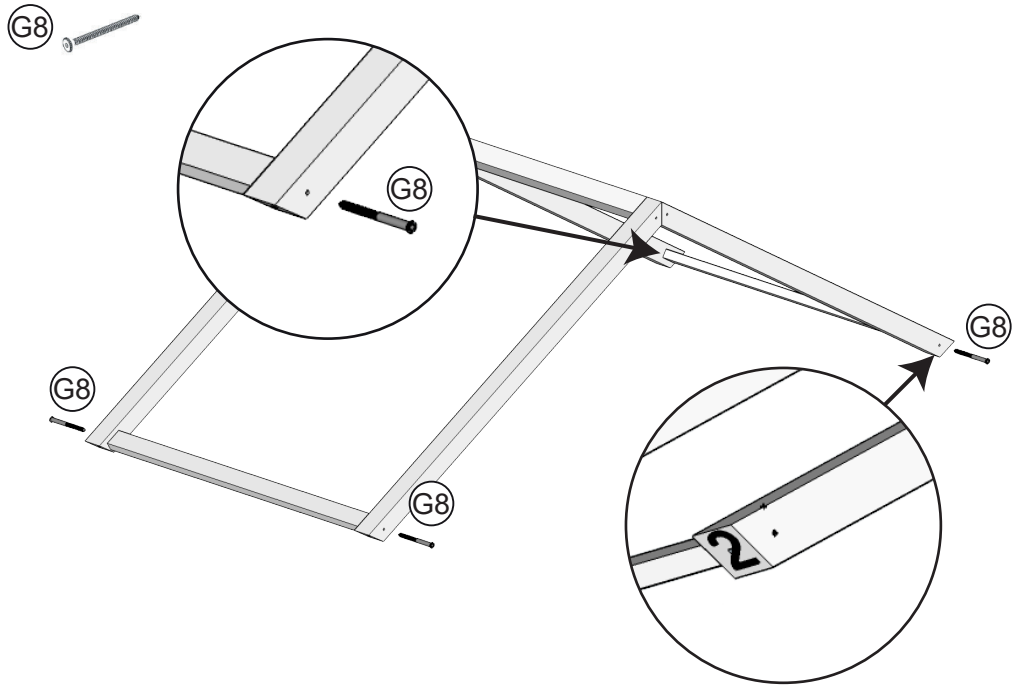
G8
G8
G8
G8
G8
2

6

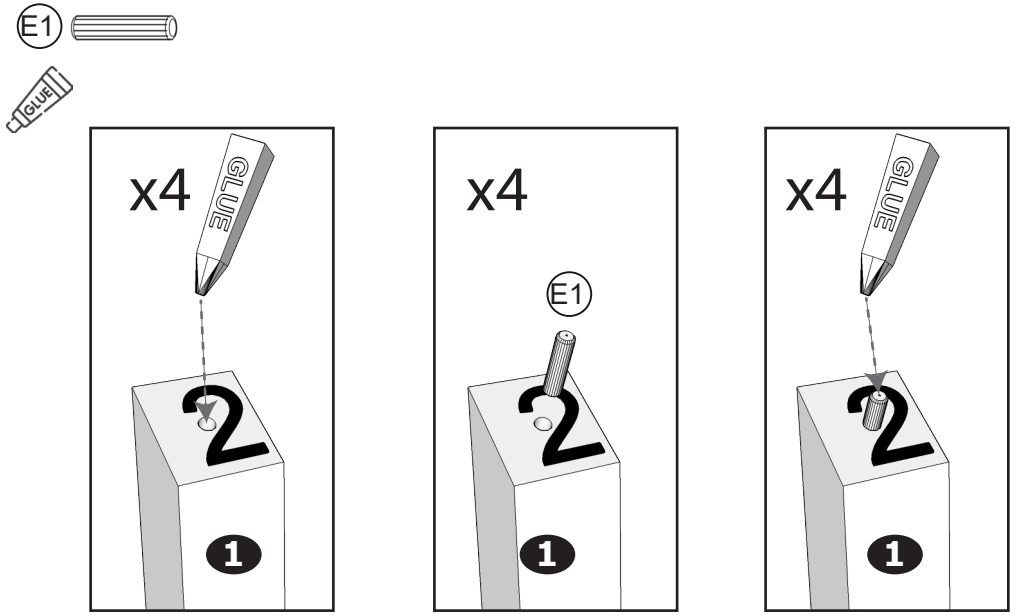
E1
GLUE
x4
GLUE
2
1
x4
E1
2
1
x4
GLUE
2
1