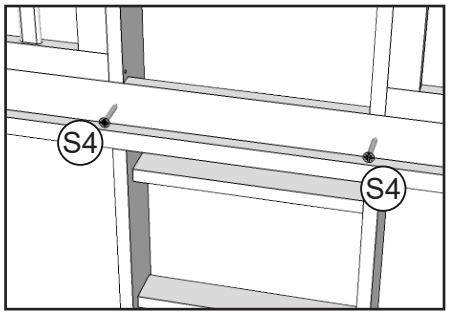

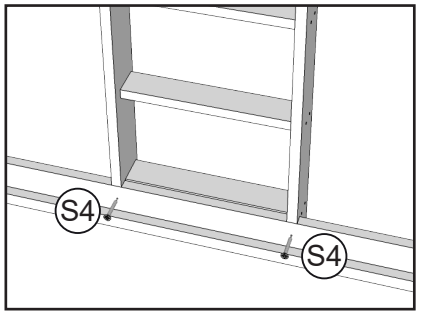

ETAGENBETT KOSMO SHORT

MONTAGEANLEITUNG





G8 6,4x80 mm **58x**	S4 3,5x40 mm **40x**	K5 7x50 mm **4x**
F5 6,4x50 mm **16x**	E1 8x45 mm **6x**	K2 **1x**
GLUE		

1 x 4 **2** x 4 **3** x 2 **4b** x 1 **4a** x 1
5 x 2 **6** x 2 **7** x 4 **8** x 4 **9** x 2
10 x 1 **11a** x 1 **11b** x 1

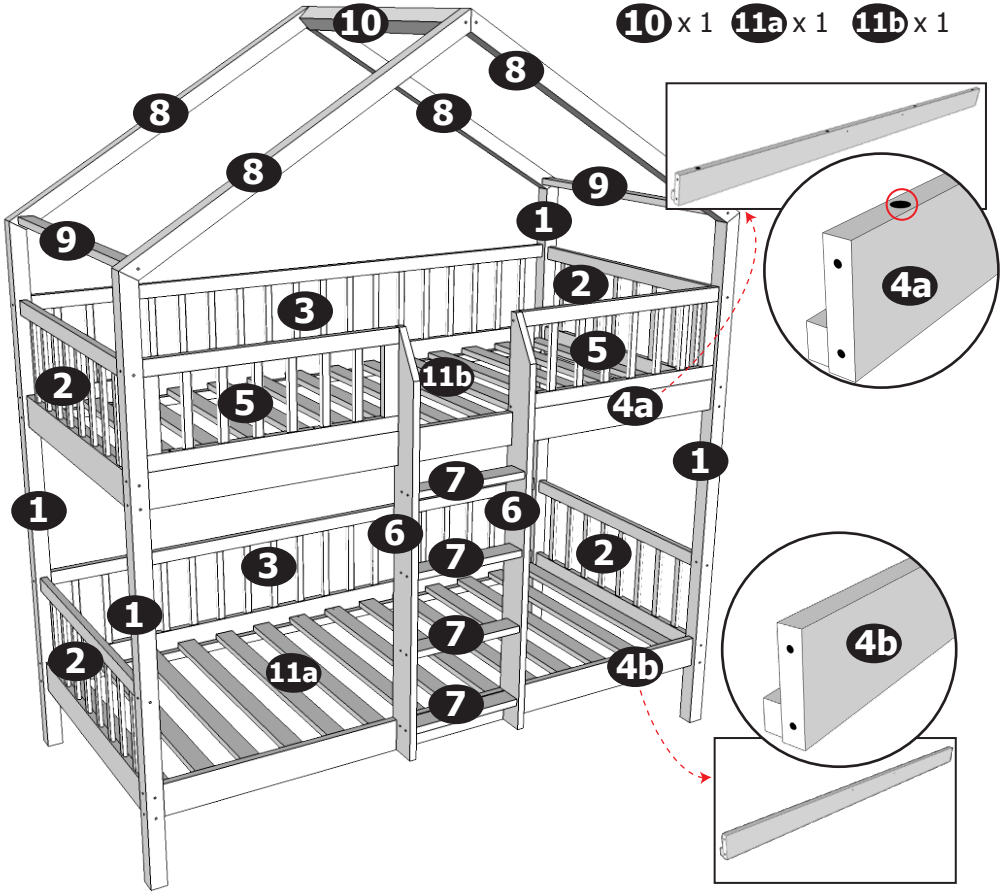

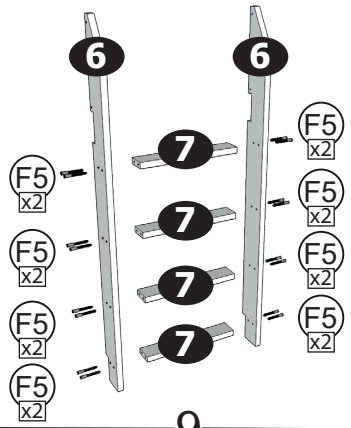

9

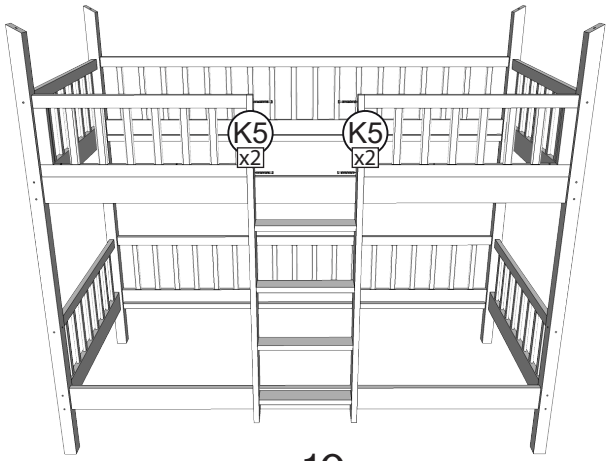

10

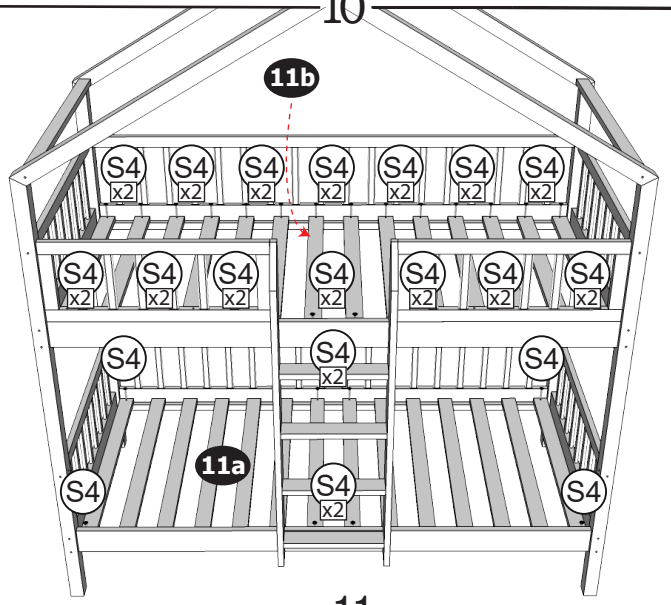

11

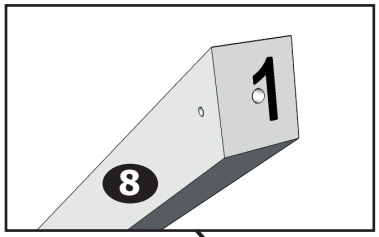

x2

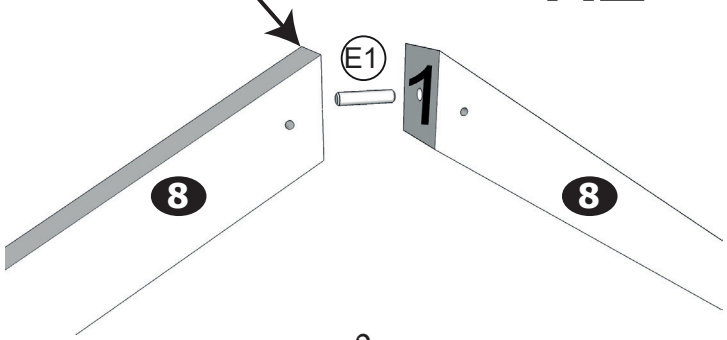

3

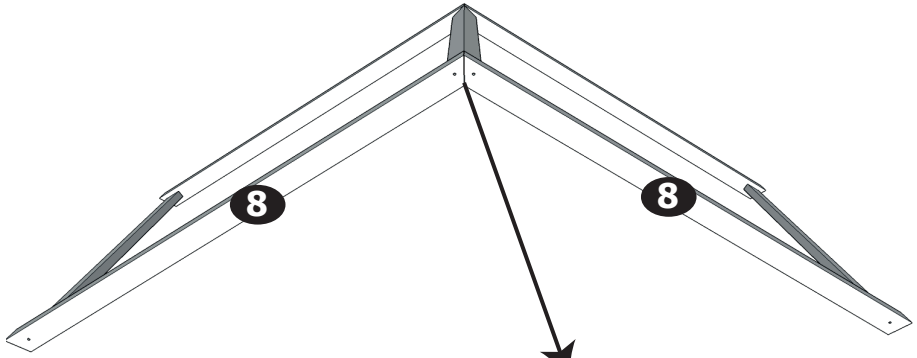

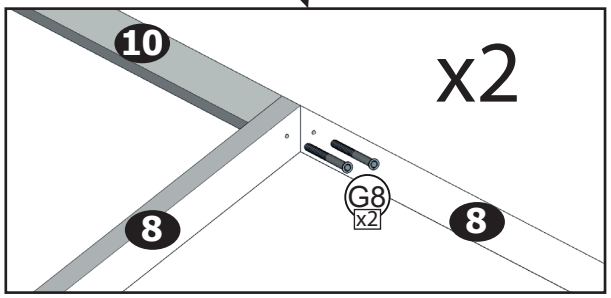

4

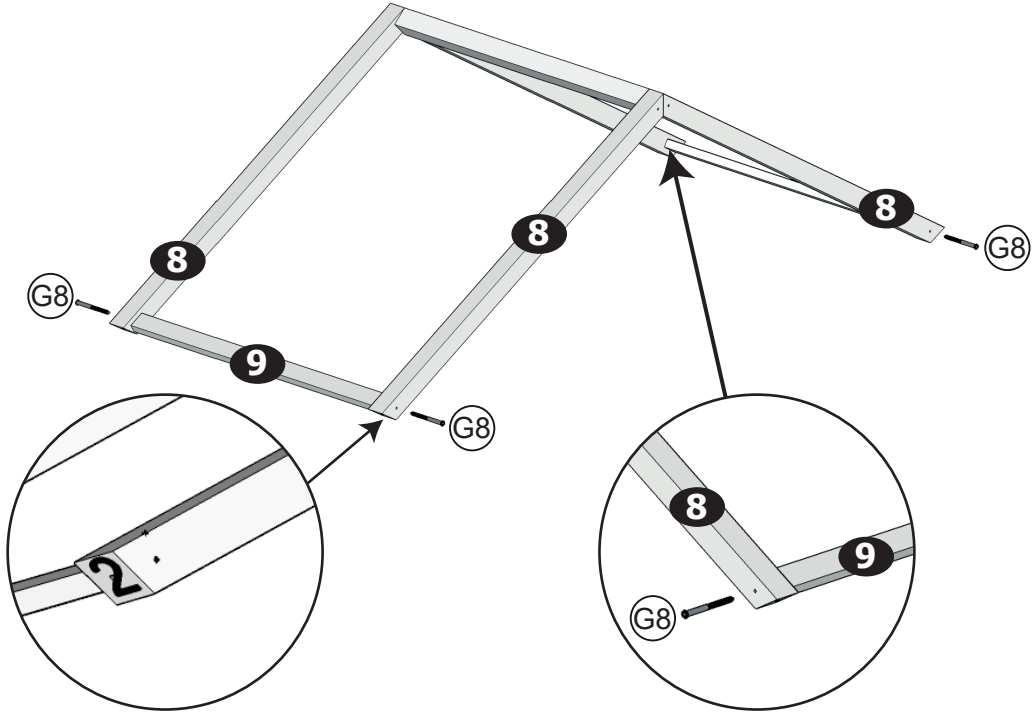

5

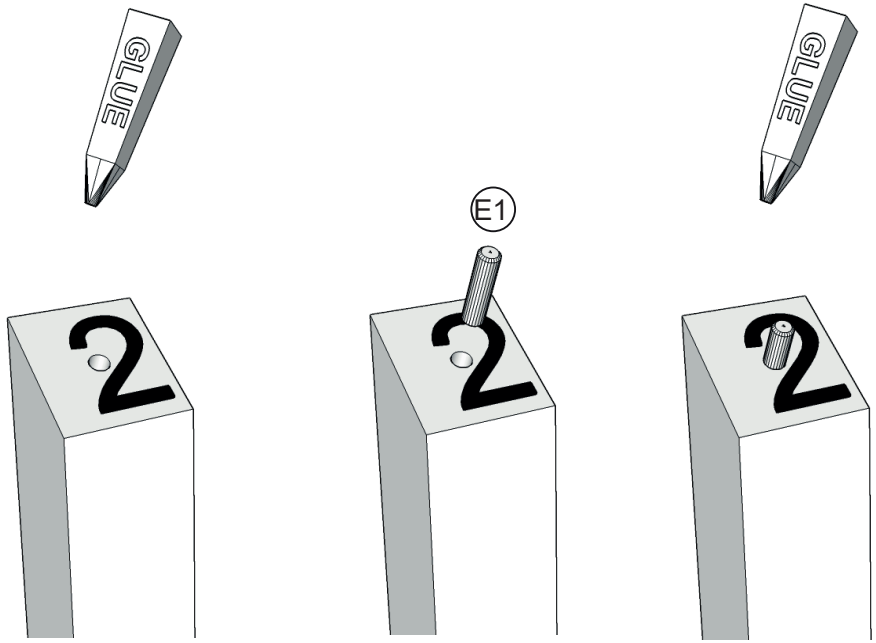

6

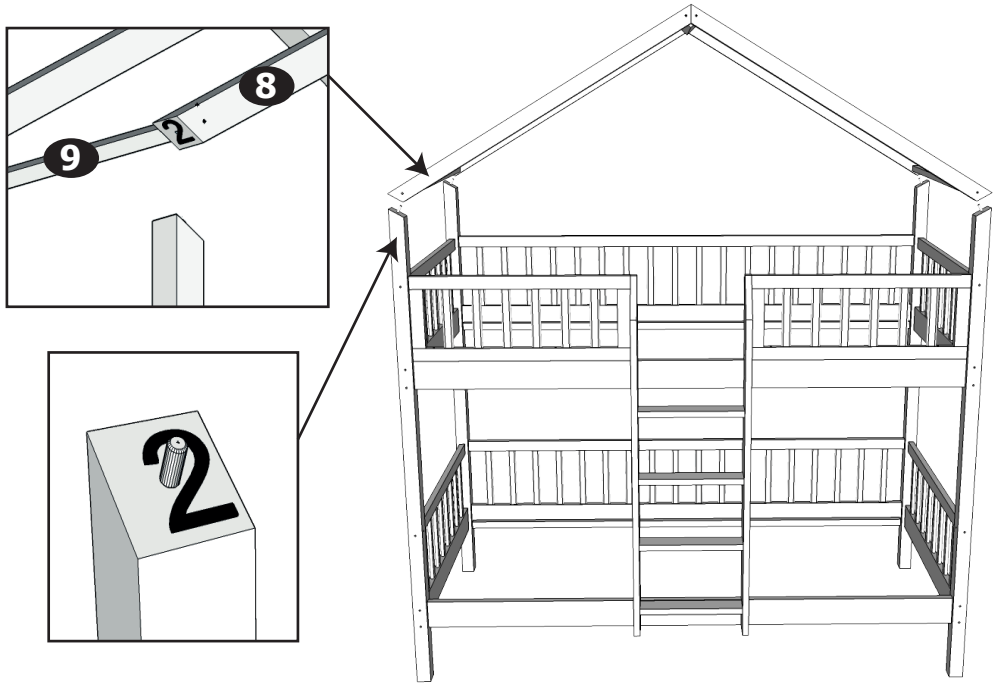
8
9
2
2

7

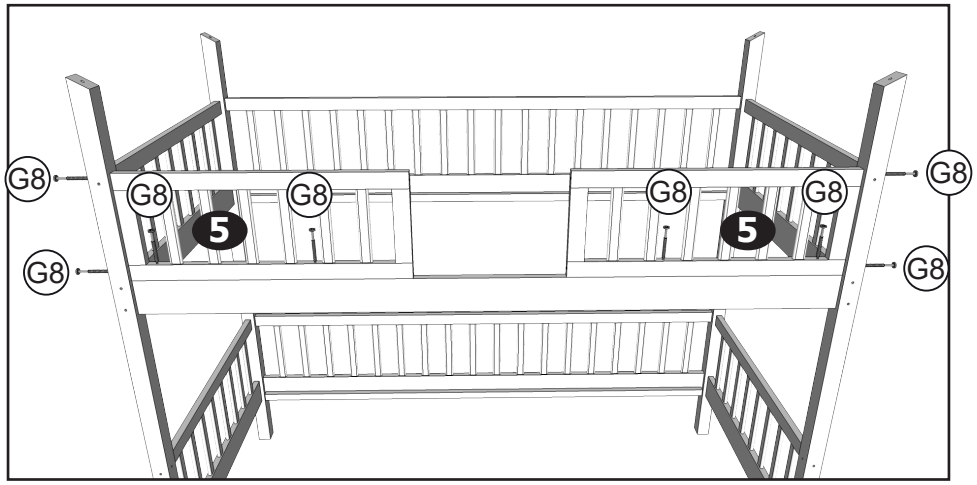
G8
G8
G8
G8
G8
G8
G8
5
5

8

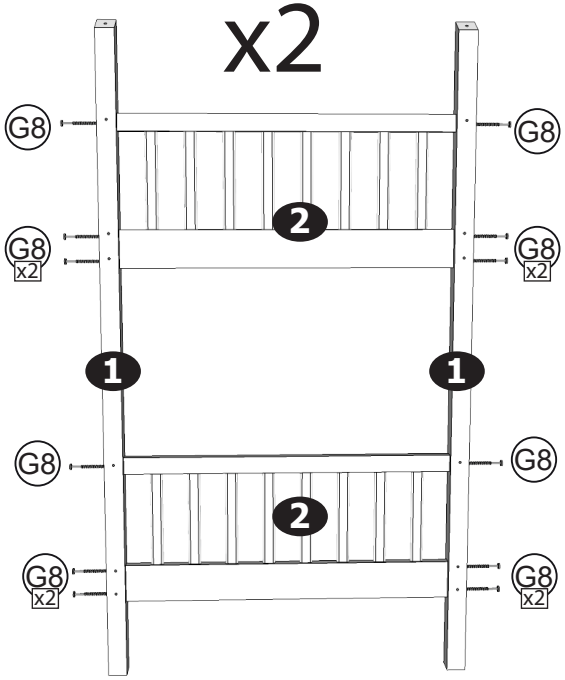
x2
G8
G8
G8
x2
G8
x2
2
1
1
G8
G8
2
G8
x2
G8
x2

1

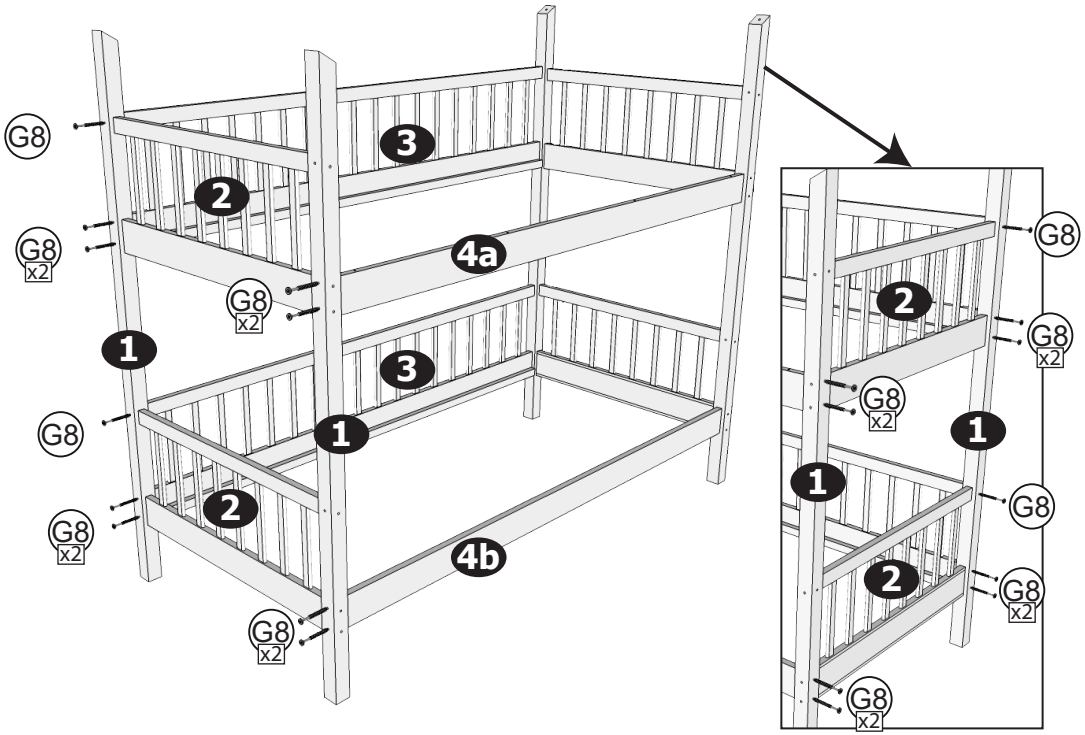
G8
3
2
G8
x2
4a
G8
x2
1
3
G8
1
2
G8
x2
4b
G8
x2
2
G8
x2
1
1
G8
2
G8
x2
G8
x2

2